Installation Guide

SpeedFace-V4L Pro Series

Version: 1.1

Due to regular upgrades of systems and products, ZKTeco could not guarantee exact consistency between the actual product and the written information in this manual.

Installation Environment

Please refer to the following recommendations for installation:



INSTALL INDOORS ONLY



AVOID INSTALLATION NEAR GLASS WINDOWS



AVOID DIRECT SUNLIGHT AND EXPOSURE



AVOID USE OF ANY HEAT SOURCE NEAR THE DEVICE

- Avoid direct contact to sunlight for a long time.
- Protect the device from moisture, water, and rain.
- Handle the device with care.
- Ensure that the device is not installed near the sea or in other locations where metal oxidation and rust may develop if the device is exposed for an extended period.
- Protect the device from lightning.
- Ensure that the device only works in an acidic or alkaline environment briefly.

How to Install the Device on the Wall?

Step 1: Stick the wall-mounting template to the wall and drill holes according to the wall-mounting template.

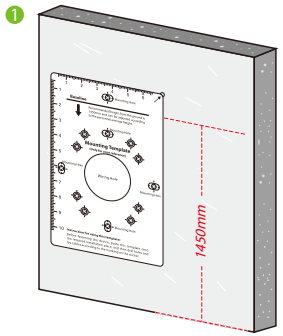

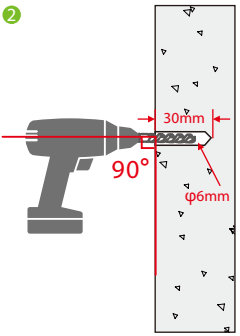

Step 2: Insert the expansion tubes into the mounting holes.

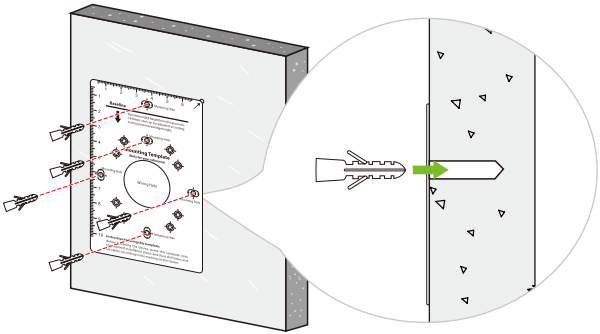

Step 3: Attach the backplate on the wall using the wall mounting screws.
Note: Please insert the wire through the backplate before installation.

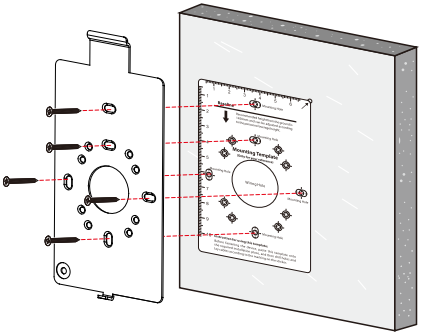

Step 4: Attach the terminal to the backplate.

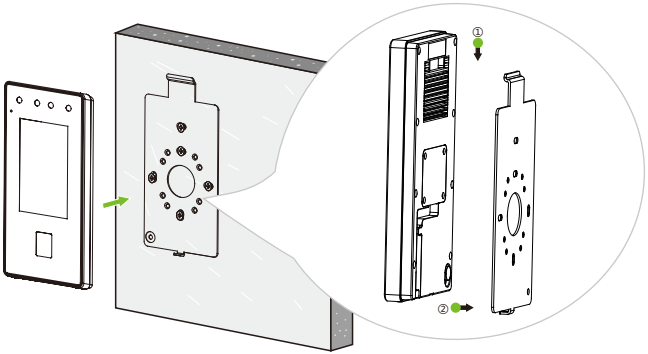

Step 5: Attach the terminal to the backplate with a security screw.

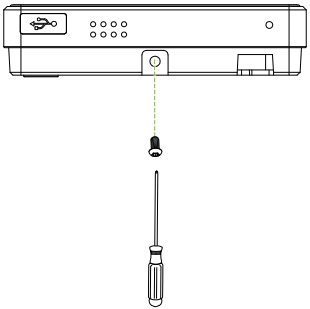

Terminal Block

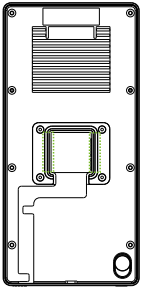

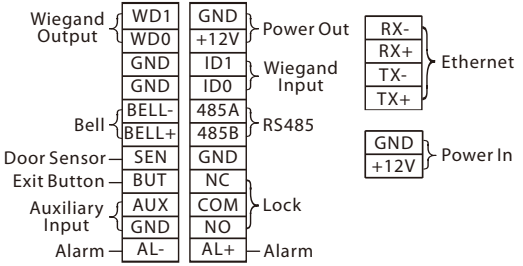

Power Connection

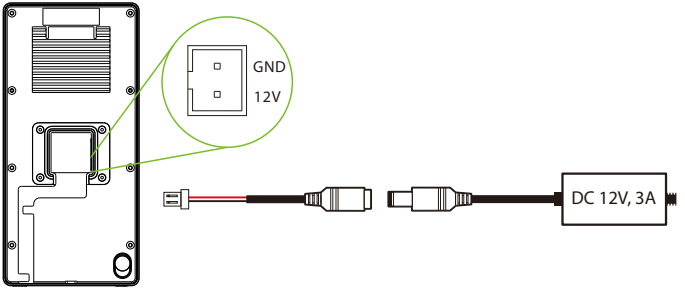

Recommended AC Adapter:

- 12V ± 10%, at least 3000mA.
- To share the power with other devices, use a power supply with higher current ratings.

Ethernet Connection

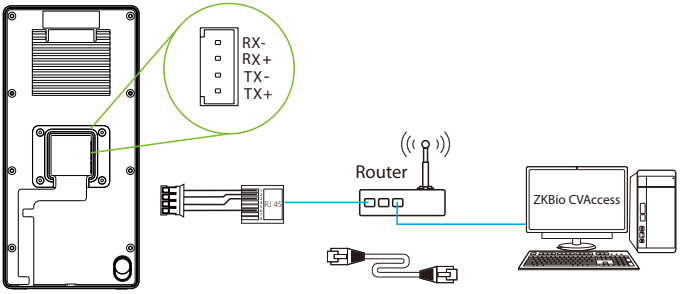

Enter **[COMM.] > [Ethernet]** to set the relevant parameters of network.

Door Bell, Exit Button and Alarm Connection

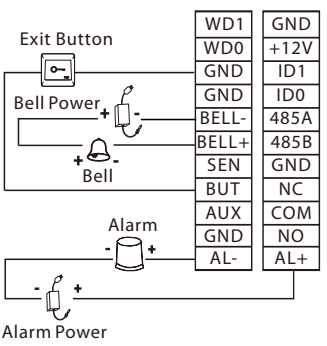

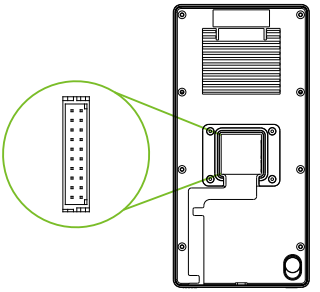

Door Sensor and Smoke Detection Connection

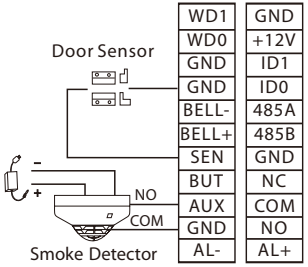

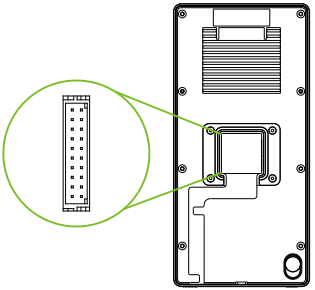

RS485 and Wiegand Connection

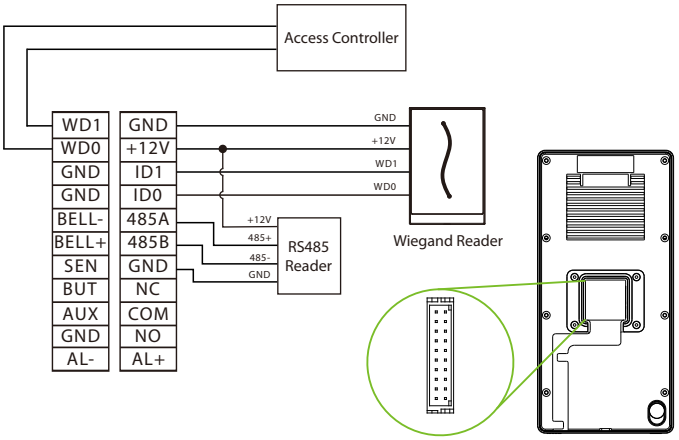

Lock Relay Connection

The system supports Normally Opened Lock and Normally Closed Lock.

The NO LOCK (normally opened at power on) is connected with "NO1" and "COM" terminals, and the NC LOCK (normally closed at power on) is connected with "NC1" and "COM" terminals. Take NC Lock as an example below:

Device not sharing power with the lock:

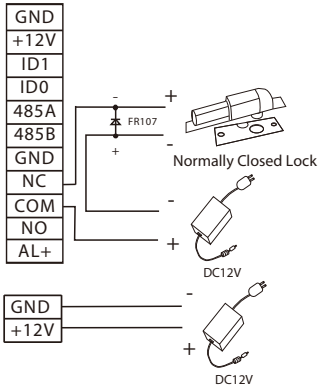

Device sharing power with the lock:

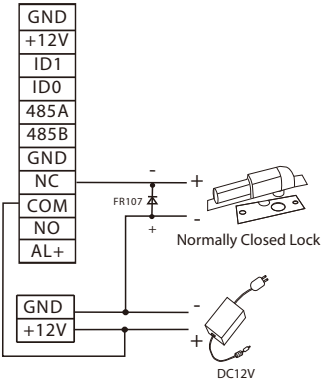

Download Center

Scan the QR Code to download the **User Manual, Installation Guide** and **Quick Start Guide**.

QR Code (Download Center)

ZKTeco Industrial Park, No. 32, Industrial Road,

Tangxia Town, Dongguan, China.

Phone : +86 769 - 82109991

Fax : +86 755 - 89602394

www.zkteco.com

Copyright © 2025 ZKTECO CO., LTD. All Rights Reserved.