SenseFP M8

Time & Attendance Terminal With Fingerprint Authentication
High Performance and Great Value

RFID Fingerprint Wi-Fi

Compatible with ZKBio Zlink



Introduction

SenseFP M8 is a time and attendance terminal which simplifies attendance solutions It is aimed at small and medium-sized businesses (SMEs) that want to manage their workforce reliably and affordably.

SenseFP M8 offers flexible authentication options, such as fingerprint authentication, RFID card verification and password entry to suit different workplace preferences. The terminal adopts the ZK optical fingerprint algorithm, enabling fast fingerprint authentication less than 1.5 seconds.

What makes SenseFP M8 stands out is that the terminal can connect to Wi-Fi and integrate with ZKBio Zlink. This lets users manage employees and equipment, set attendance rules and check real-time attendance reports on their desktop or mobile device.

Features

- Intuitive user interface with a 2.8 inch TFT color LCD display and 16 physical buttons.
- Multiple Authentication Methods: Fingerprint (ZKFingerprint V13.0 algorithm) / RFID card / Password.
- Supports up to 500 users' capacity with 500 fingerprint templates and 500 RFID card capacity.
- Available RFID Modules:125 kHz ID Card (standard) / 13.56 MHz IC Card (optional).
- Connect to Wi-Fi (IEEE802.11b/g/n) @ 2.4 GHz).
- Support Online Firmware Upgrade.
- Compatible with ZKBio Zlink.

Specifications

Model	SenseFP M8
Display	2.8"@ TFT Color LCD Screen (320*240)
Operation System	Linux
Hardware	RAM: 8MB; ROM: 16MB Speaker: 8ohm @1W Physical Keypad: 16 Keys Fingerprint Sensor: ZK Optical Sensor Casing Color: Black and White
Authentication method	Fingerprint / Card / Password (Physical Keypad)
Fingerprint Template Capacity	500 (1:N) (Standard)
Card Capacity	500 (1:N) (Standard)
User Capacity	500 (1:N) (Standard)
Transaction Capacity	100,000 (1:N) (Standard)
Max. User Password Length	6 Digits
Biometric Authentication Speed	less than 1.5 sec (Fingerprint)
False Acceptance Rate (FAR) %	FAR < 0.0001% (Fingerprint)
False Rejection Rate (FRR) %	FRR <0.1%(Fingerprint)
Biometric Algorithm	ZKFingerprint V13.0
Card Type	ID Card@125 kHz (Standard) IC Card@13.56 MHz (Optional)
Communication	Wi-Fi (IEEE802.11b/g/n) @ 2.4 GHz USB: Type A*1 (to import data for a firmware upgrade only)
Standard Functions	DST, Up to 14-digit User ID, Record Query, Automatic Status Switch, Multiple Authentication Methods, T9 Keyboard (Input), Online Firmware Upgrade
Optional Functions	IC Card
Power Supply	DC 5V 2A
Operating Temperature	0°C to 45°C
Operating Humidity	20% to 80% RH (Non-condensing)
Dimensions	135.5 mm*118.23 mm*35.95 mm (L*W*H)
Gross Weight	0.245 Kg
Net Weight	0.485 Kg
Supported Software	Mobile App.: ZKBio Zlink Cloud-based Software: ZKBio Zlink
Installation	Wall-mount (Compatible with Asian Gang-box / Single Gang-Box)
Certifications	ISO14001, ISO9001, CE, FCC, RoHS

Configuration



Dimensions (mm)

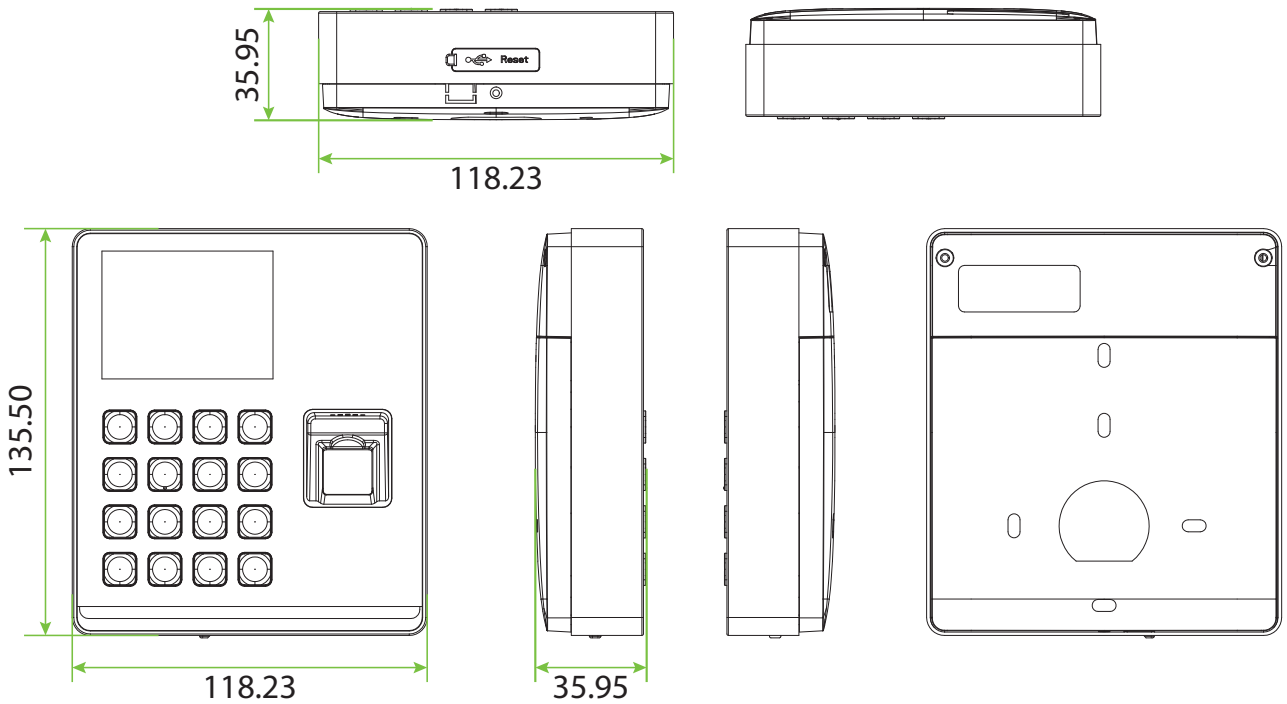

ZKTECO CO., LTD. www.zkteco.com E-mail: sales@zkteco.com

Copyright © 2025 ZKTECO CO., LTD. All rights reserved.